Toyota A750E
A760E, A761E, A960E

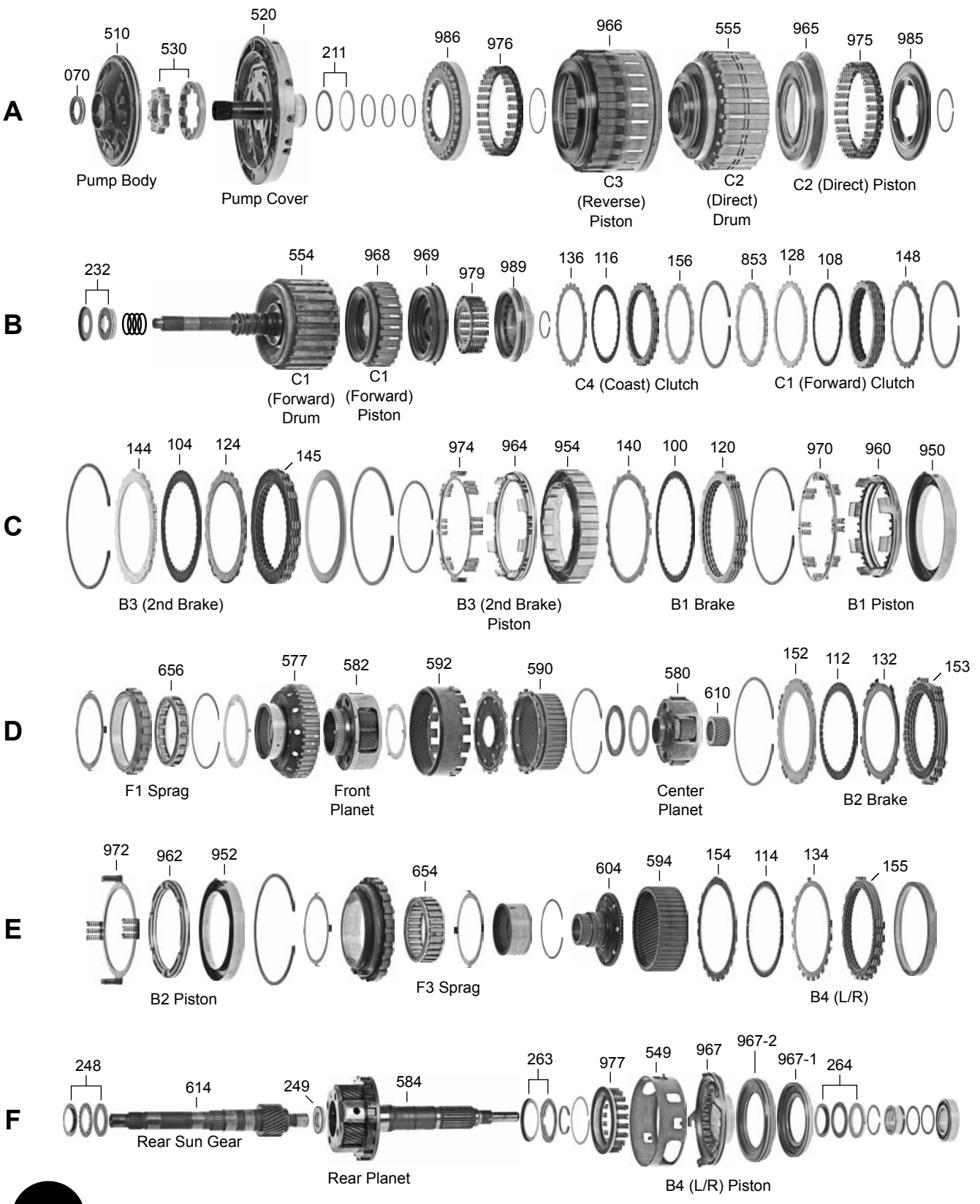

(A761E PHOTO)

A750E, A760E, A960E

Cobra Transmission
Performance and Quality Parts... Delivered
1-800-293-1848

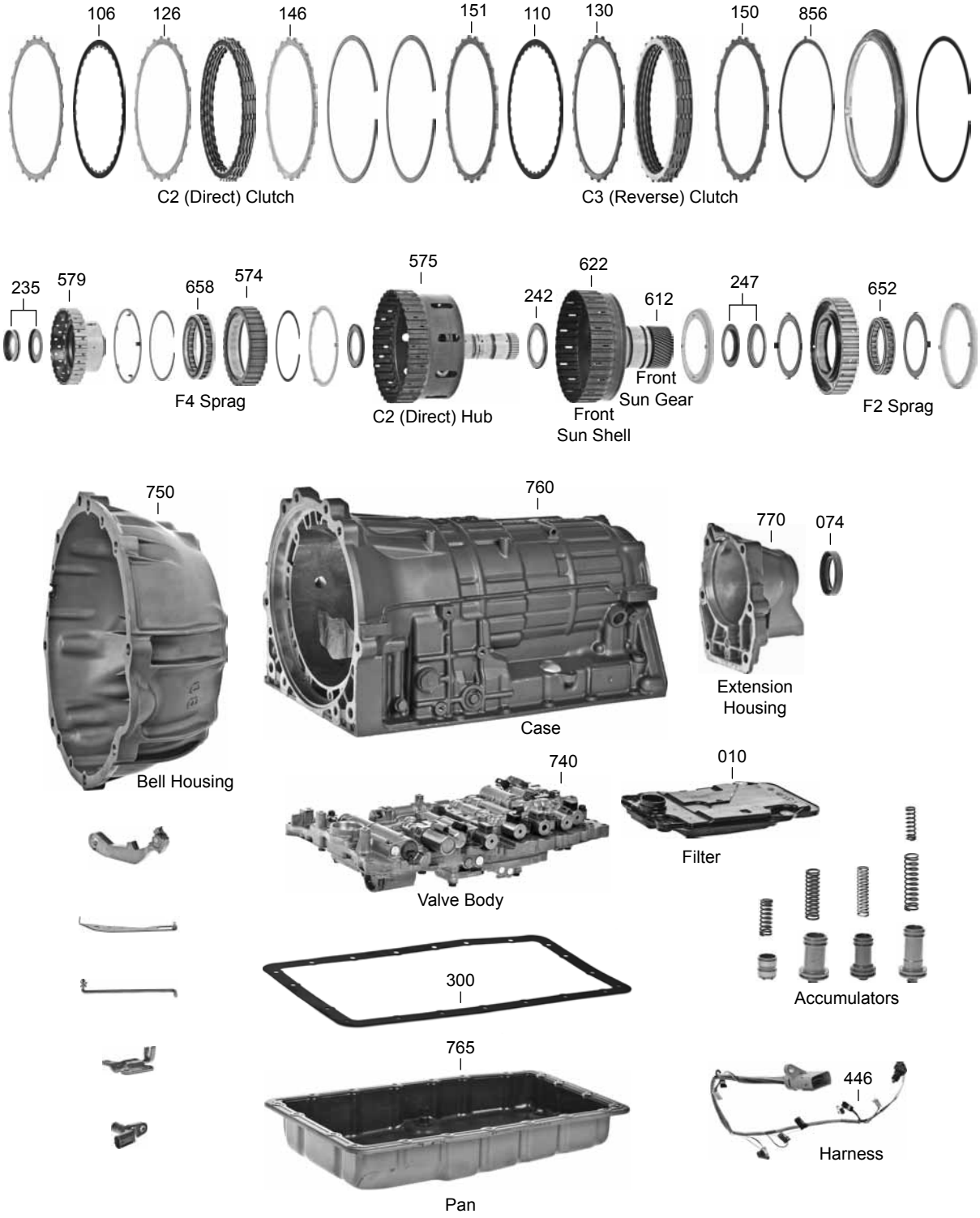

(A761E PHOTO)

Cobra Transmission
Performance and Quality Parts... Delivered
1-800-293-1848